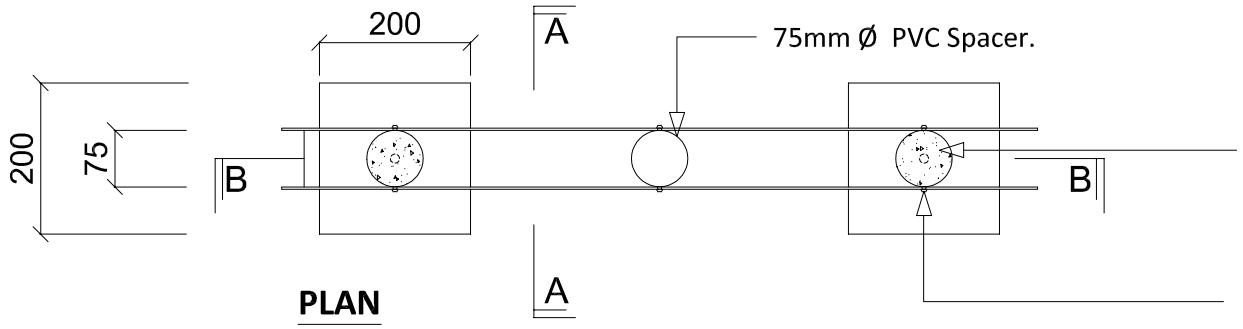

PLAN

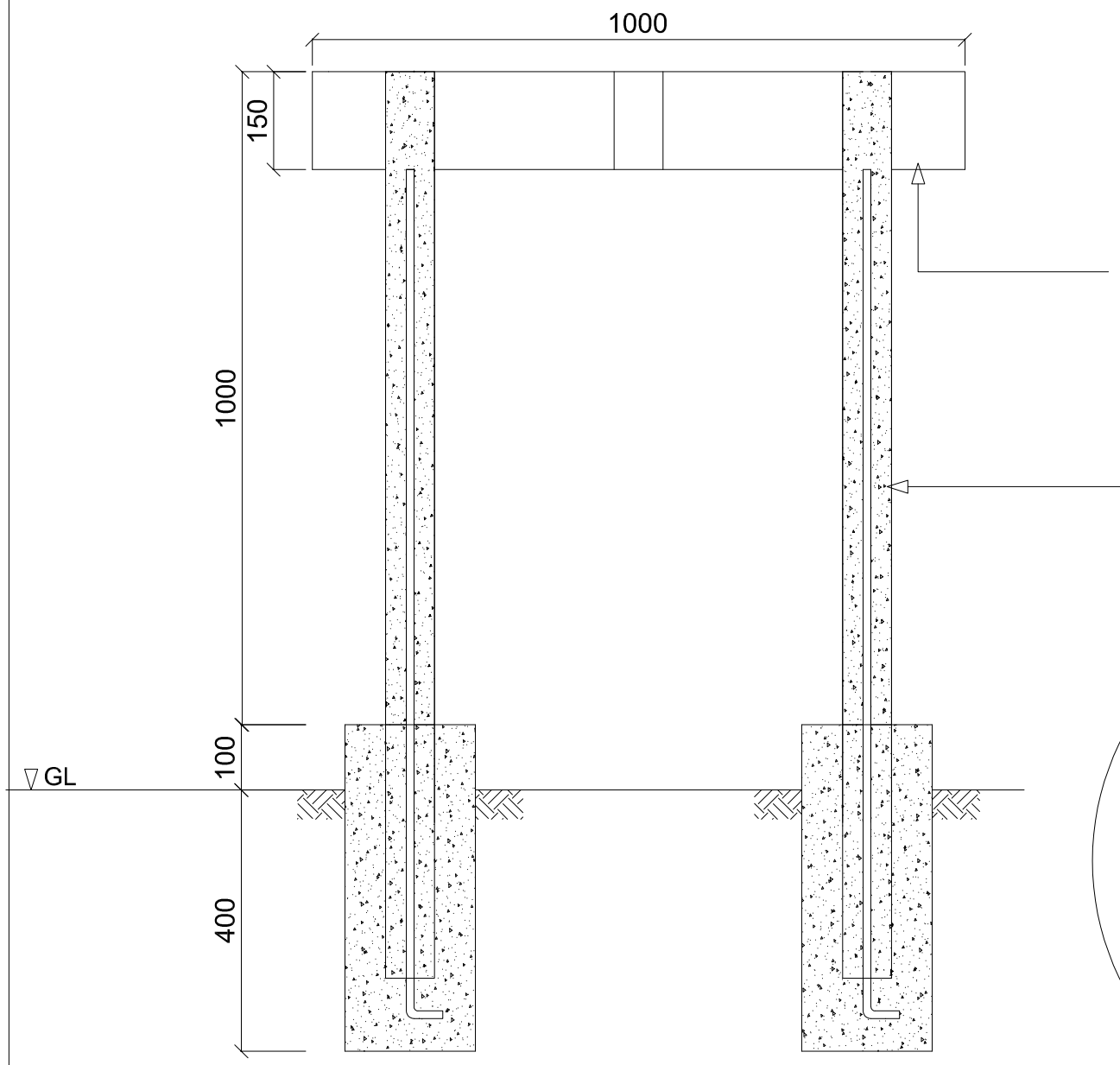

1. 3M 610 series Reflective sticker print out + UV layer permanently glued to alucarbon (Alluminium composite) board with a warranty of minimum two (2) years.
2. Colours of all exposed printed Logo/ Alphabet/Lettering from faded with a warranty minimum of One (1) year from manuf's.

75mm Ø PVC column pipe filled with mass conc. ancorhored with one (1) no. of Y12 to high.

SECTION B-B

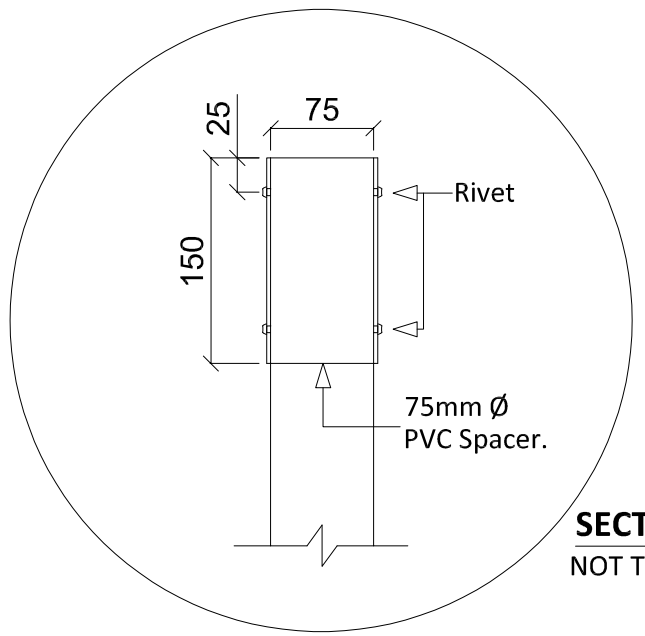

SECTION A-A

NOT TO SCALE

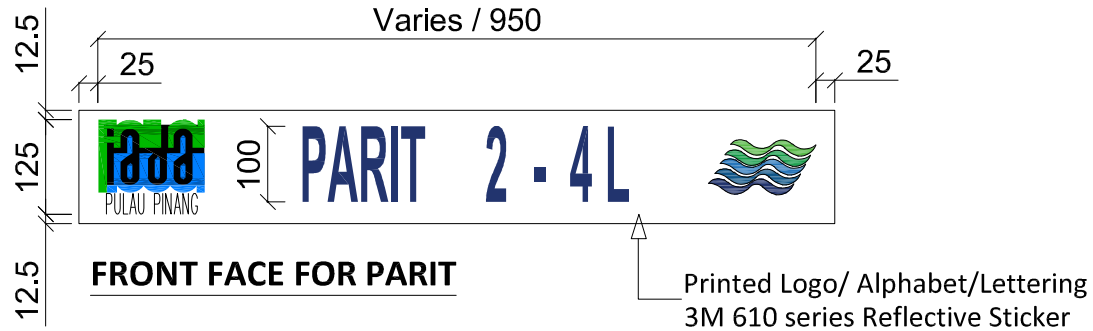

FRONT FACE FOR PARIT

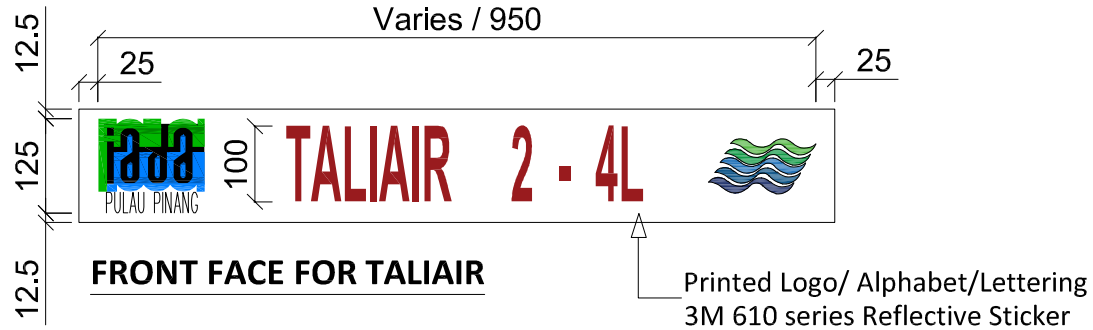

FRONT FACE FOR TALIAIR

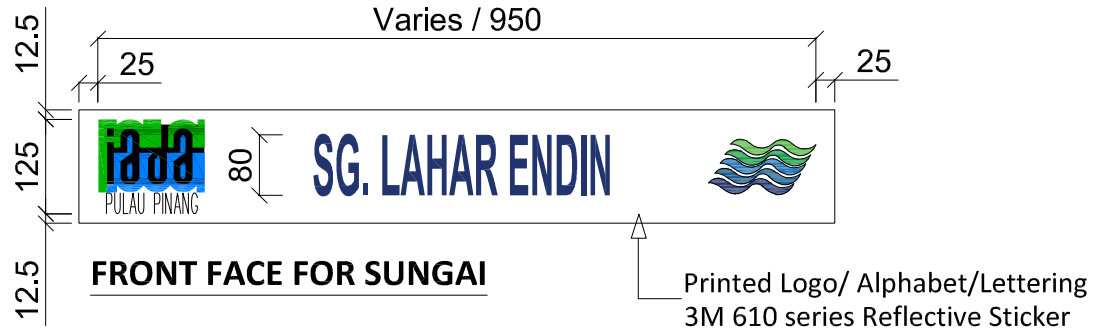

FRONT FACE FOR SUNGAI

NOTES

1. All dimension are in milimiters
2. The exact location and rotation of the signboard on site shall be as directed by S.O.
3. The colour of the name of River and Drain shall be DARK BLUE as directed by S.O.
4. The colour of the name of Canal shall be DARK RED as directed by S.O.
5. The font for all lettering shall be Sans Serif as shown

PEMILIK :

PULAU PINANG

KAWASAN PEMBANGUNAN PERTANIAN BERSEPADU (IADA) PULAU PINANG
KEMENTERIAN PERTANIAN DAN INDUSTRI ASAS TANI,
JALAN JELAWAT, SEBERANG JAYA,
13700 PERAI
PULAU PINANG

BUTIRAN	NOTA / PINDAAN	TANDATANGAN	TARIKH

TAJUK/PERKARA :

KAWASAN PEMBANGUNAN PERTANIAN BERSEPADU PULAU PINANG

PAPAN TANDA NAMA SUNGAI, PARIT DAN TALI AIR

INILAH PELAN YANG BERKAITAN DIDALAM KONTRAK NO.

JURUTERA PROJEK :

PENOLONG JURUTERA :

	NAMA	TARIKH	SKALA : 1:10
DIUBAHSUAI OLEH			NO. PELAN : IADA/STD/M/2023
DISEMAK OLEH			
DILUKIS OLEH	NAAR	FEB 2023	NO. NEG